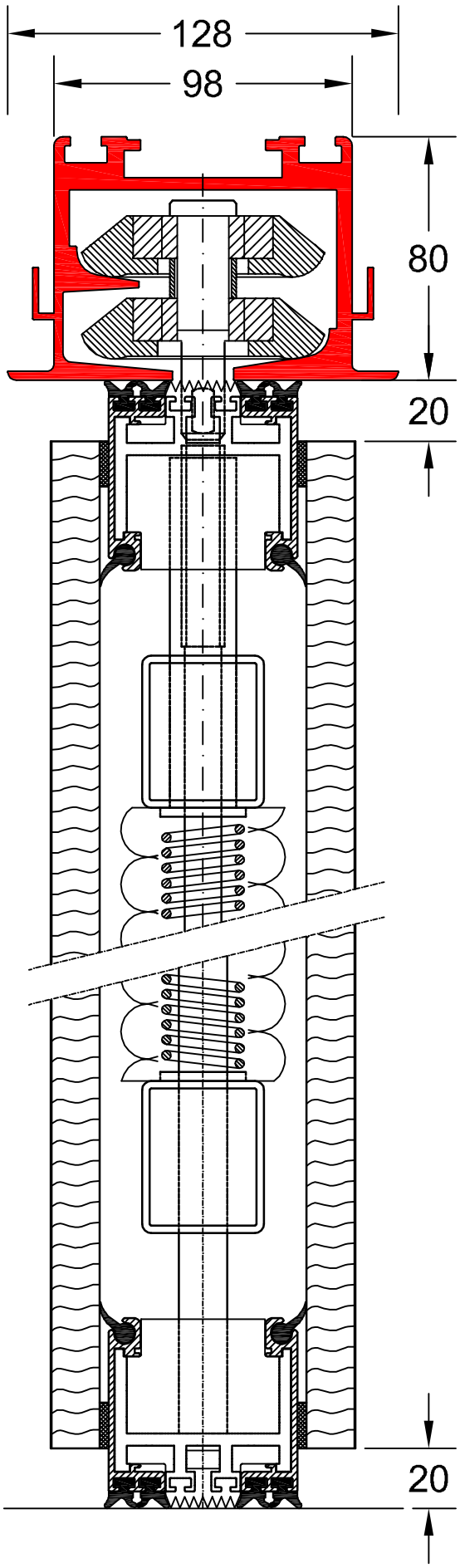

movingdesigns LIMITED
movable and folding doors

Product Prestige Space Movable Wall		Date Nov 2010	Dwn JAL
Detail Double Point ~ Section Throu'		Scale 1 : 2	Dwg Rev A
		Drawing No. MD~PS01DP	